Air/10/643

ROYAL AIR FORCE.

Air
10
SEUM
OPY

TECHNICAL NOTES

SOPWITH TRIPLANE.

643

NOTE.

THE information contained herein is not to be communicated either directly or indirectly to any person not holding an official position in His Majesty's Forces.

T.5.

SOPWITH TRIPLANE (SINGLE-SEATER).
(110 H.P. & 130 H.P. CLERGET.)

MANUFACTURERS' ORDER OF ERECTION.

1. Fuselage assembled and trued up.
2. Tail Skid fitted and Cloche fitted.
3. Fairing, Dashboard and Deck fitted.
4. Controls fitted in front of Fuselage.
5. Undercarriage fitted.
6. Machine erected in Flying Position with Main Planes and Empennage in Skeleton and trued up.
7. Controls loosely connected.
8. Main Planes and Empennage dismantled.
9. Petrol Tanks fitted.
10. Engine Mounted and Engine Accessories and Controls fitted
11. Gun Magazine and Chutes fitted.
12. Oil Tank fitted.
13. Gun and Actuating Gear fitted.
14. Centre Section fitted (after being covered and doped).
15. Wheels and Shock Absorbers fitted on Undercarriage.
16. Cowling fitted.
17. Main Planes and Empennage fitted (after being covered and doped).
18. Fuselage covered and doped.
19. Controls connected up and adjusted.

SOPWITH TRIPLANE (SINGLE-SEATER).

(110 H.P. & 130 H.P. CLERGET.)

TRUING UP FUSELAGE.

The Fuselage is symmetrical in plan view throughout, and in Flying Position all Side Struts are vertical. The inner interplane Struts form part of the Fuselage. The side struts are numbered from front to rear, No. 4 being also the Inner Interplane Struts. To true up, support the Fuselage on two trestles, one placed between Side Struts Nos. 3 and 4, and the other under the Tail.

Mark points on all Side Struts and on the Sternpost 9" vertically below the top face of the Top Longerons, and mark the middle points of all Top and Bottom Cross Struts.

The marked points on the Side Struts will be along the Datum line in side elevation with Fuselage true and in Flying Position. True up the Fuselage supports so as to level the Top Longerons as far as possible. By means of side Bracing Wires in bays adjacent to Inner Interplane Struts adjust until the Spars are level transversely. Check by straightedge and spirit level. The Top Longerons should be level and remain level. Drop a plumb line along the Sternpost. Before any truing up is attempted it is necessary to ensure that Strut Sockets are accurately spaced along the Longerons, and particularly that corresponding consecutive Sockets on both sides are equally spaced; also that all Struts are cut accurately to length.

Working from Front to Rear, adjust Internal Cross Bracing Wires, making corresponding diagonals equal at each section, and check by trammel all through.

Stretch a line from the mid point of the Front Top Cross Strut to the Sternpost. Adjust Top Cross Bracing Wires until the mid points of all Top Cross Struts are in line with the top stretched centre line.

Check by try-square at each mid point. The base of try-square should be along the Strut, and the marked point on one edge of the blade. The top stretched centre line should just touch the same edge of the blade.

Adjust Bottom Cross Bracing Wires until a plumb line dropped from the mid point of a Top Cross Strut strikes the mid point of the corresponding Bottom Cross Strut.

Slacken the Side Bracing Wires on one side, and by means of the Side Bracing Wires on the other side true up until all marked points on Side Struts 5, 6, 7, 8, 9, and the marked point on the Sternpost are in line in Side Elevation.

Level from marked point to marked point on consecutive Side Struts, using a long straightedge across the marked points and moving the straightedge from front to rear.

Proceed in a similar manner on the other side. During the whole process of truing up the Fuselage it is important to check continually for the Top Longerons being level, and the front engine plate and sternpost for being vertical.

The Fuselage should be checked for twist at all stages of truing. This can be done by putting two straightedges across the Top Longerons, one at the front, and the other at different points along the Fuselage. If there is no twist, the rear straightedge will always be in line with the front straightedge.

NOTE:—

(*a*) Tie rods should be cut accurately to length, otherwise it will be impossible to get the Fuselage true.

(*b*) It is important in truing up the Fuselage not to overtighten the Bracing Wires and so prevent unnecessary stresses being set up in the Struts and Longerons.

(*c*) On all Wires where Turnbuckles occur the threaded portion should be fully engaged inside the Barrels, and the Turnbuckles locked by wire.

(*d*) Care should be taken with Lock Nuts on Tie Rods, as overtightening may fracture the Rods.

TRUING UP THE UNDERCARRIAGE.

The Undercarriage is symmetrical about the vertical centre line of machine.

True up by adjusting Front Cross Bracing Wires, making corresponding diagonals equal, and check by trammel.

PLACING MACHINE IN FLYING POSITION.

Before truing up the Centre Section and attaching and truing up the Main Planes, it is necessary to get the Machine in Flying Position. To do this, block up the Machine under the Undercarriage struts and support the Tail on a trestle placed near the Sternpost.*

The Machine is in Flying Position when the Top Longerons are level longitudinally, the Front and Rear Spars at bottom of Fuselage are level transversely; and the Datum Line along the Side Struts is horizontal.

Make transverse adjustments by packing blocks under the Undercarriage Struts and make longitudinal adjustments by raising or lowering the Tail.

---

* If the Engine is in position it is advisable to hang a weight of about 20lbs. on the tail of the Fuselage.

TRUING UP THE CENTRE SECTION.

The Centre Section should be symmetrical about the vertical centre line of Machine. Adjust by Cross Bracing Wires, making corresponding diagonals equal and check by trammel. Also check by dropping two plumb lines, one each side of the Centre Section, so that they fall in line with the front Engine Plate Struts viewed from the side. These plumb lines should be equidistant from the Engine Plate Struts.

The total Stagger of the Top Centre Section should be 36". Check by dropping plumb lines from the Leading Edge of the Top Centre Section so as to clear the Fuselage Longerons. The horizontal fore and aft distances between these plumb lines and the Leading Edges of the Bottom Box Ribs should be 36". When viewed from the front, the Inner Interplane Struts should be vertical.

ATTACHING THE MAIN PLANES.

Place the lower Main Planes in position and insert the Securing Rods from the front, supporting the Wing Tips on trestles.

Loosely connect the Landing Wires.

Fit the Outer Interplane Struts on the Intermediate Main Planes, and by means of the Struts lift the Intermediate Main Planes into position, fitting the Struts into the Bottom Sockets on the Lower Main Planes, and insert the securing Rods from the front.

Loosely connect up all the drag and anti-drag Wires.

The Top Plane is fixed with Tie Rods in Centre Section and with two Bolts to the top of the Outer Interplane Strut fitting.

Place the Top Main Plane in position and connect up to Interplane Struts and Centre Section. Connect up all remaining Interplane Wires.

TRUING UP THE MAIN PLANES.

The *Dihedral* of all Main Planes is $2\frac{1}{2}°$.

Adjust by Landing Wires, and check by Abney Level and Straightedge, or Dihedral Board and Spirit Level, along the Front Spars of the Upper Main Planes.

The *Stagger* from Upper Main Plane to Lower Main Plane is 36", being 18" between Upper and Intermediate and Intermediate and Lower Main Planes respectively.

This should be correct at the Centre Section. To ensure that it is constant throughout, place straightedges across the Leading Edges of the Main Planes. Adjust Drag and Anti-Drag Wires until any two of these straightedges are in line.

Check for Main Planes being square with Machine by taking measurements from Top and Bottom Sockets of Outer Interplane Struts to Rudderpost and Front Drag Wiring Plates. Corresponding measurements should be the same on both sides.

The *Incidence* is 2° for all Main Planes. Check by Abney Level and Straightedge, placing the latter along the chord of a rib.

This can only be adjusted if the fittings on Interplane Struts have not been drilled.

It is important throughout the process of truing the Main Planes to check the Dihedral, Stagger and Incidence to ensure that adjustments for one do not throw the others out.

FIXING THE EMPENNAGE.

Place the Tail Plane into position, passing the holes in the Clips on the Front Spar over the Eye Bolts, which are secured to the fittings on the Top Longerons.

Bolt down and Split Pin the Bolts.

Fit the Nut and Screw Tail Plane Adjustment between the Fitting on the Rear Spar Tube, and the corresponding Fitting on the sternpost.

Hinge the Elevators to the Tail Plane, and insert the Split Pins.

Fit the Fin in position, and connect up the Tail Plane Bracing Wires.

True up the Tail Plane to be level transversely and to be square with the Machine.

Check for transverse level by spirit level over the Front and Rear Spars, and check for being square with Machine by taking measurements from Bottom Sockets of Outer Interplane Struts to lateral extremities of Rear Spar of Tail Plane.

These measurements should be the same on both sides.

The Raf-wire should be carefully tensioned up so that the Tail Plane is held firmly and undue tension being avoided.

The Incidence of Tail Plane in its normal position is $1\frac{1}{2}°$. In this position the distance between top Longerons and under surface of the Rear Spar should be $1\frac{15}{16}$". Any adjustments by means of nut and screw can be made after trials.

Hinge Rudder to Fin Sternpost and insert the Split Pins.

The Fin should point directly fore and aft and be square with Machine.

CONTROLS.

With Pilot's Control Stick central the Ailerons should droop $\frac{1}{2}$" below the Trailing Edges of Main Planes.

With Pilot's Control Stick vertical the Elevators should be in direct continuation of the Tail Plane.

With Rudder Bar square in Fuselage the Rudder and Tail Skid should point directly fore and aft and be square with Machine.

SOPWITH TRIPLANE (SINGLE-SEATER).
(110 H.P. & 130 H.P. CLERGET.)

LIST OF PRINCIPAL DIMENSIONS.

Span of Upper Main Planes	26′ 6″
Span of Intermediate Main Planes	26′ 6″
Span of Lower Main Planes	26′ 6″
Chord of Upper Main Planes	3′ 3″
Chord of Intermediate Main Planes	3′ 3″
Chord of Lower Main Planes	3′ 3″
Incidence of Upper Main Planes	2°
Incidence of Intermediate Main Planes	2°
Incidence of Lower Main Planes	2°
Stagger of Intermediate Main Planes	18″
Total Stagger	36″
Dihedral of Upper Main Planes	2½°
Dihedral of Intermediate Main Planes	2½°
Dihedral of Lower Main Planes	2½°
Overall Length	19′ 6″
Overall Height	10′ 6″
Incidence of Tail Plane (Centre Line) in normal position	1½°
Droop of Ailerons with Control Stick Central	½″
Wheel Track	5′ 6″

SOPWITH TRIPLANE (SINGLE-SEATER).
(110 H.P. & 130 H.P. CLERGET.)

POINTS TO OBSERVE WHEN OVERHAULING MACHINE.

See that the Leading Edges of the Main Planes are symmetrical about the centre line of Machine.

Check the Stagger.

Examine the Bracing Wires for length and tautness in the Centre Section, and see that the Split Pins are in position, that Lock Nuts are tight, and that Tie Rods for Main Planes are secure.

Check the Dihedral.

Check the Incidence.

See that the Interplane Struts are straight.

Examine all Main Plane Bracing Wires for length and tautness, and see that all Split Pins are in position.

Examine all Controls, Control Pulleys, and Cables, and see that they work freely, and that Turnbuckles on Cables are locked.

Examine Tail Plane and see that it is set correctly, and is square with Machine, that Tail Plane Bracing Wires are correct, both as to tautness and length, that all Split Pins are in position, and that Lock Nuts are tight.

Examine Rudder and Fin and see that they are set straight and square with Machine.

Check the setting of the Ailerons and Elevators.

Examine Undercarriage and Skid.

Examine Tank Mountings and Connections.

Examine Engine Mounting, Engine Controls, and Engine Accessories.

T.5 SOPWITH TRIPLANE (SINGLE SEATER)
(130 H.P. CLERGET).

FIG. I.

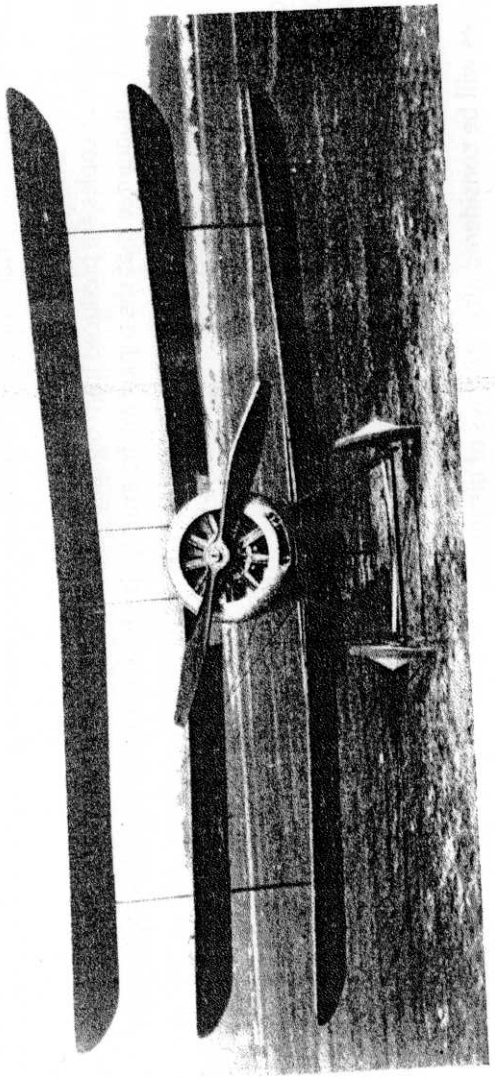

T.5. SOPWITH TRIPLANE (SINGLE SEATER)
(130 H.P. CLERGET).

FIG. 2.

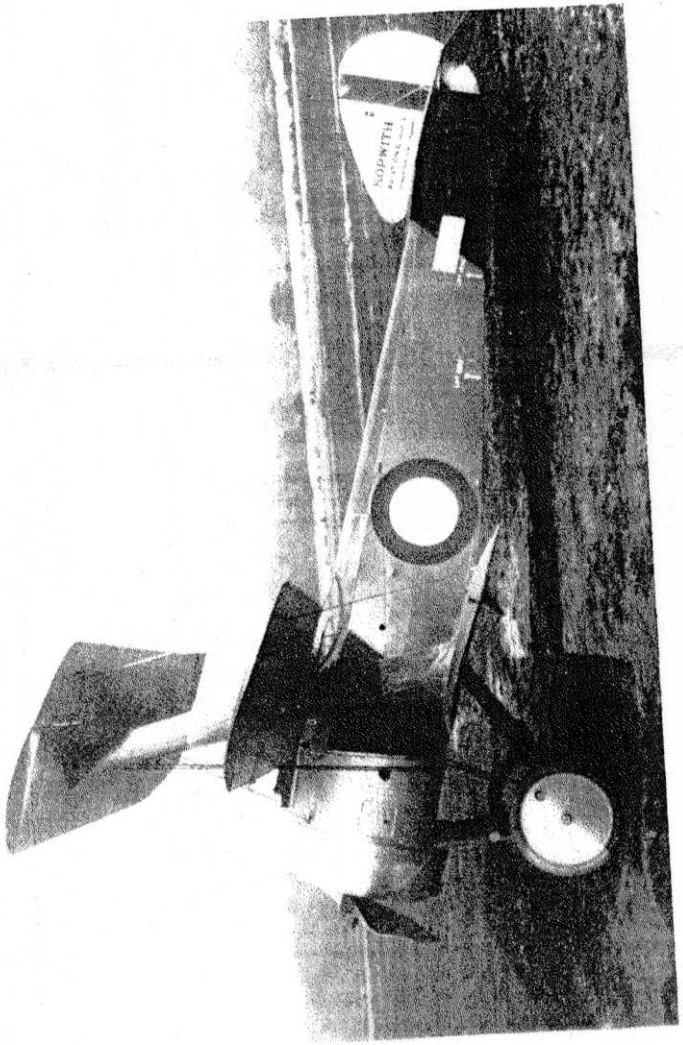

T.5 SOPWITH TRIPLANE (SINGLE SEATER)
(130 H.P. CLERGET). FIG. 3.

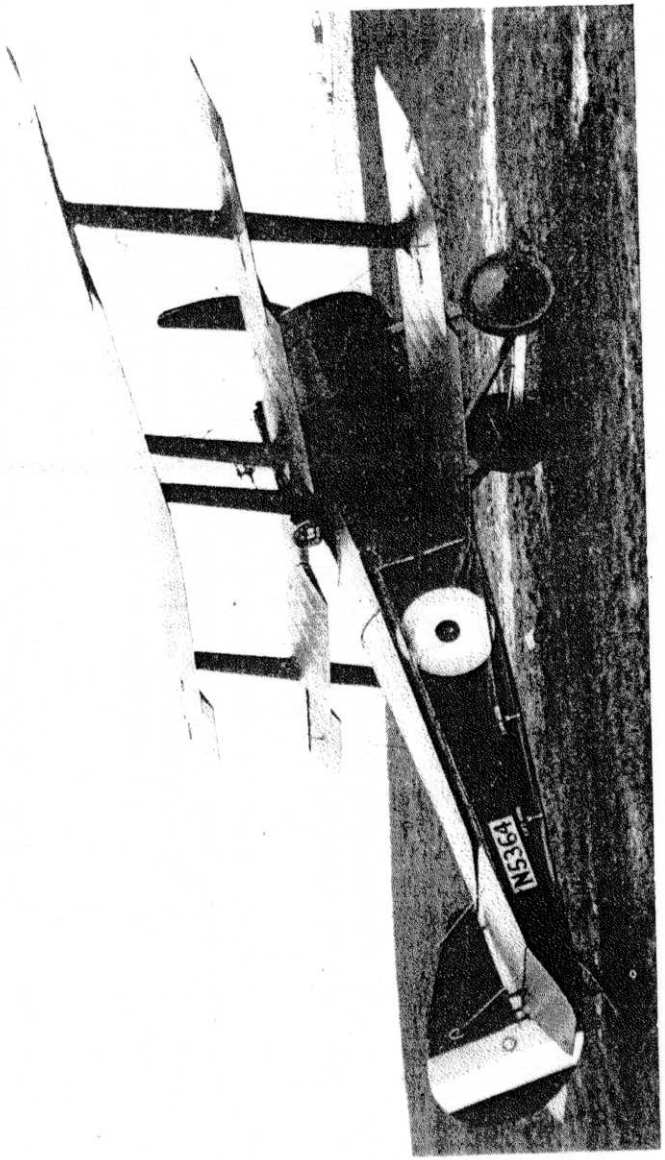

T.5. SOPWITH TRIPLANE (SINGLE SEATER)
(110 H.P. and 130 H.P. CLERGET).

FIG. 4.

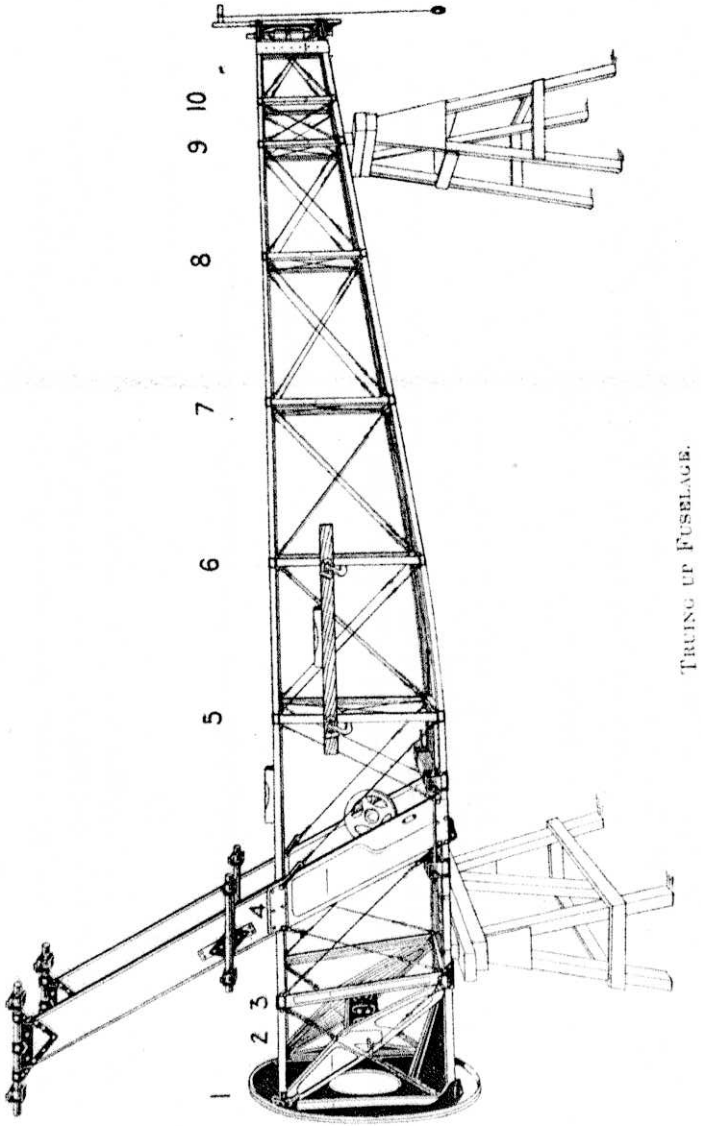

TRUING UP FUSELAGE.

T.5. SOPWITH TRIPLANE (SINGLE SEATER).
(110 H.P. and 130 H.P. CLERGET.)

Fig. 5.

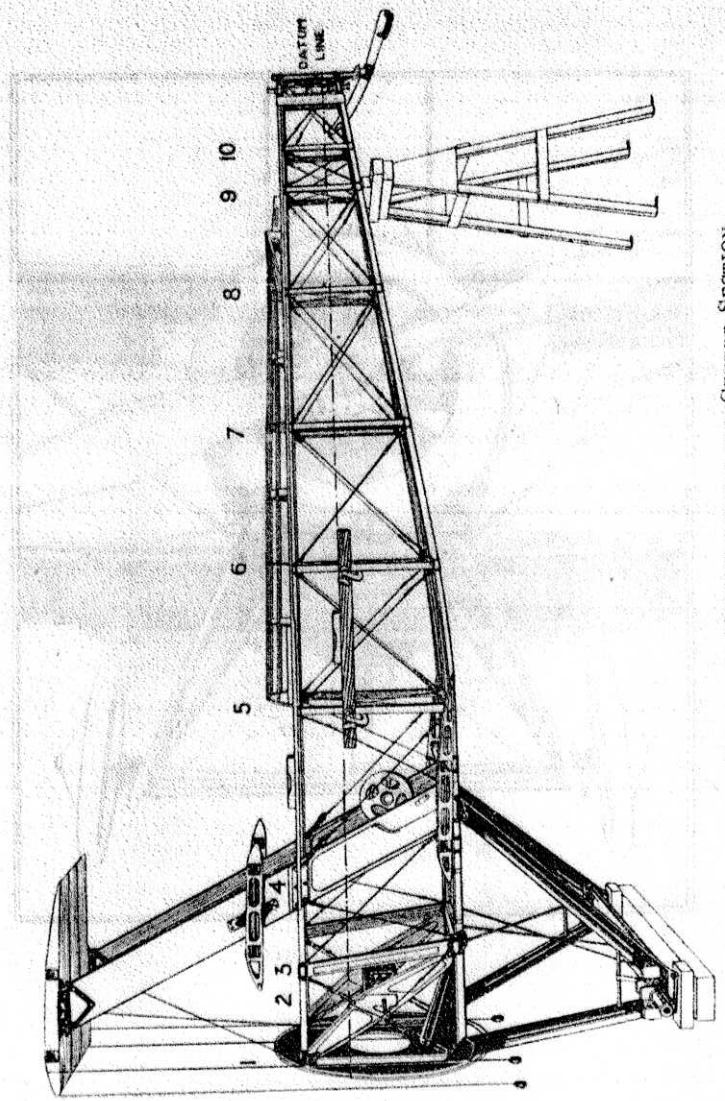

TRUING UP UNDERCARRIAGE AND CENTRE SECTION.

T.5. SOPWITH TRIPLANE (SINGLE SEATER).
(130 H.P. CLERGET.)
Fig. 6.

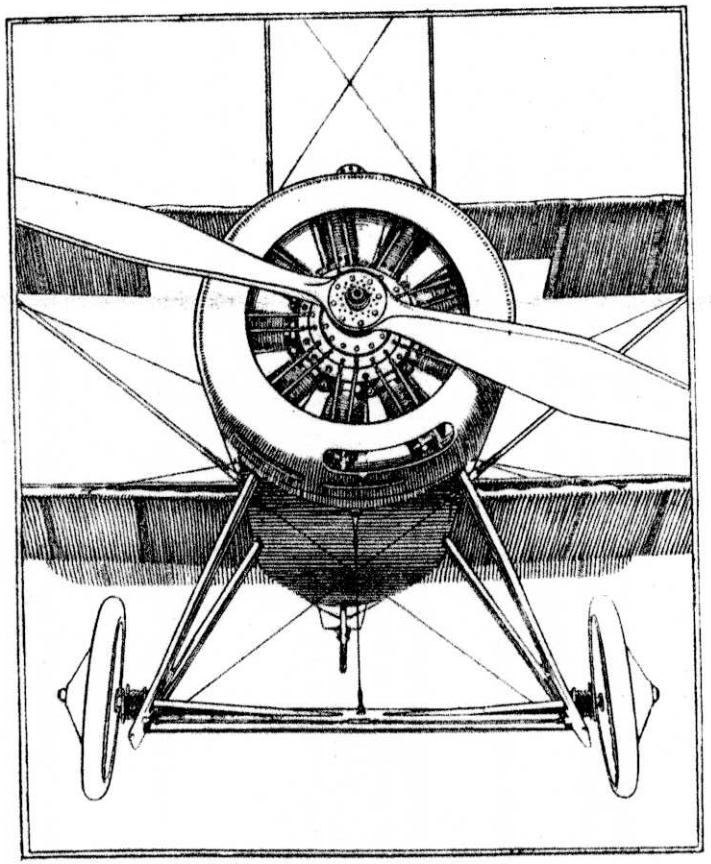

UNDERCARRIAGE.

T.5. SOPWITH TRIPLANE (SINGLE SEATER)
(110 H.P. and 130 H.P. CLERGET).
Fig. 7.

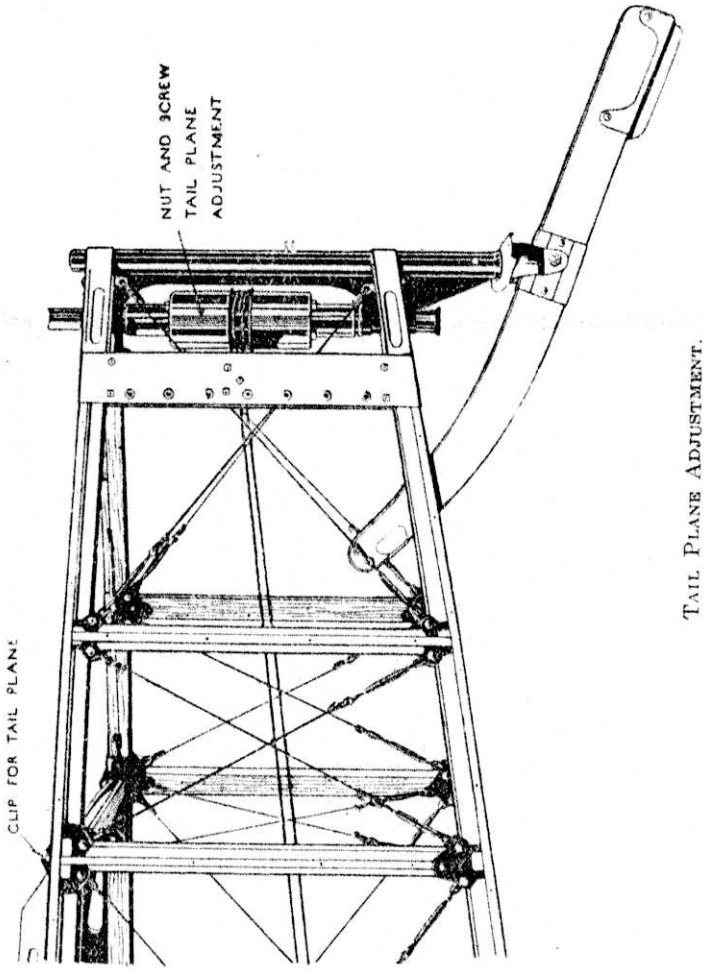

TAIL PLANE ADJUSTMENT.

SOPWITH TRIPLANE (SINGLE-SEATER).

(110 H.P. AND 130 H.P. CLERGET.)

RIGGING DIAGRAMS.

SOPWITH TRIPLANE (SINGLE SEATER).

(110 H.P. AND 130 H.P. CLERGET.)

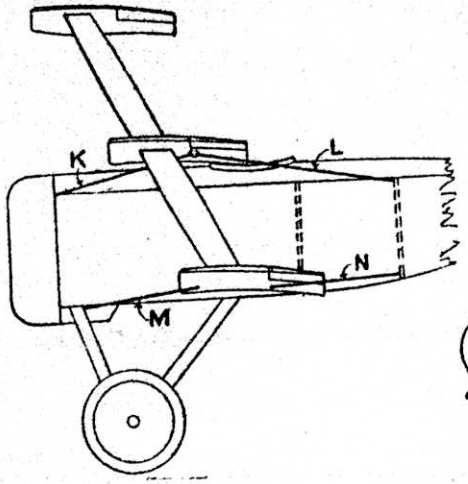

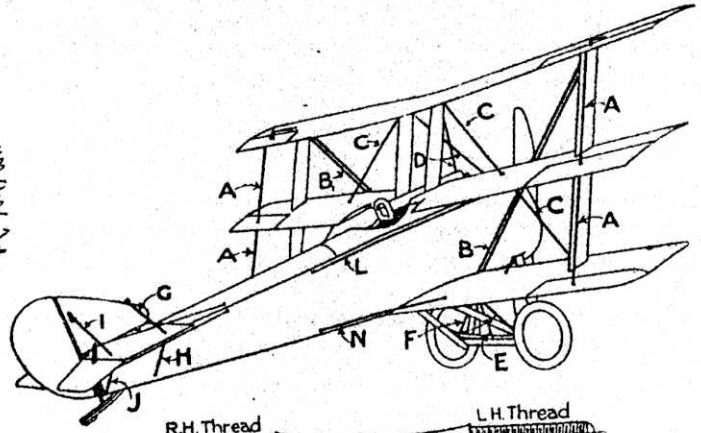

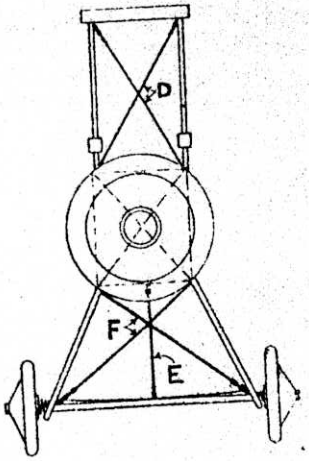

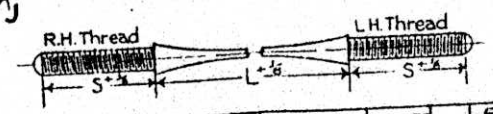

Ref.	Description	Size	No. off	Lengths S	Lengths L	Part No.
A	Aileron Connecting Wires	2 B.A.	4	1¾"	33"	A.G.S. 347
B	Flying Wires	¼ B.S.F.	4	2"	118¼"	" 348
C	Landing Wires	¼ B.S.F.	2	2"	116¾"	" "
D	Centre Section Cross Bracing Wires	¼ B.S.F.	2	2"	46⅝"	" "
E	Undercarriage Centre Wire	¼ B.S.F.	1	2"	28½"	" "
F	" Cross Bracing Wires	¼ B.S.F.	2	2"	47"	" "
G	Tail Plane Bracing Wires (Top Front)	2 B.A.	2	1¾"	24"	" 347
H	" " " (Bottom Front	2 B.A.	2	1¾"	20¾"	" "
I	" " " (Top Rear)	2 B.A.	2	1¾"	26¼"	" "
J	" " " (Bottom Rear	2 B.A.	2	1¾"	25¾"	" "
K	Intermediate Main Plane Drag Wires	2 B.A.	2	1¾"	55⅜"	" "
L	" " " Anti Drag "	2 B.A.	2	1¾"	70½"	" "
M	Lower Main Plane Drag Wires	¼ B.S.F.	2	2"	41"	" 348
N	" " " Anti Drag "	2 B.A.	2	1¾"	33⅜"	" 347

SOPWITH TRIPLANE (SINGLE SEATER).

(110 H.P. AND 130 H.P. CLERGET.)

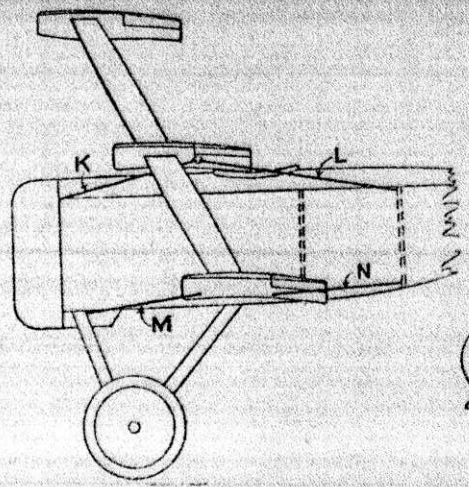

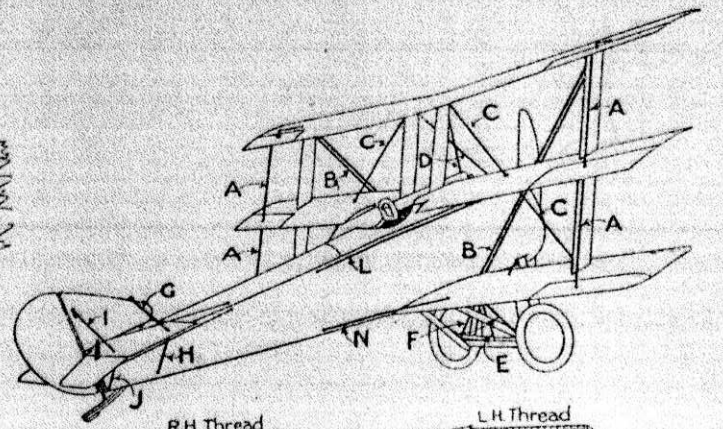

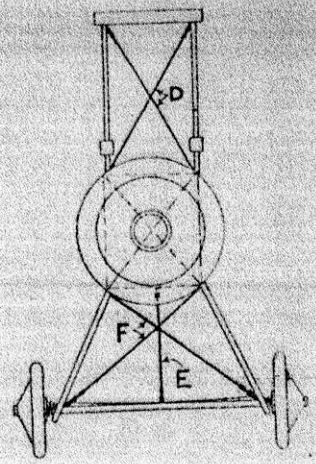

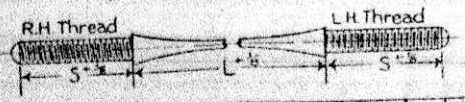

Ref.	Description	Size	No. off	Lengths S	Lengths L	Part No.
A	Aileron Connecting Wires	2 B.A.	4	1¾"	33"	A.G.S. 347
B	Flying Wires	¼ B.S.F.	4	2"	118¼"	" 348
C	Landing Wires	¼ B.S.F.	2	2"	116¾"	" "
D	Centre Section Cross Bracing Wires	¼ B.S.F.	2	2"	46⅝"	" "
E	Undercarriage Centre Wire	¼ B.S.F.	1	2"	28½"	" "
F	" Cross Bracing Wires	¼ B.S.F.	2	2"	47"	" "
G	Tail Plane Bracing Wires (*Top Front*)	2 B.A.	2	1¾"	24"	347
H	" " " (*Bottom Front*)	2 B.A.	2	1¾"	20¾"	" "
I	" " " (*Top Rear*)	2 B.A.	2	1¾"	26¼"	" "
J	" " " (*Bottom Rear*)	2 B.A.	2	1¾"	25¾"	" "
K	Intermediate Main Plane Drag Wires	2 B.A.	2	1¾"	55⅜"	" "
L	" " " Anti Drag "	2 B.A.	2	1¾"	70½"	" "
M	Lower Main Plane Drag Wires	¼ B.S.F.	2	2"	41"	" 348
N	" " " Anti Drag "	2 B.A.	2	1¾"	33⅜"	" 347

T.5.

SOPWITH TRIPLANE (SINGLE SEATER).

(130 H.P. CLERGET.)

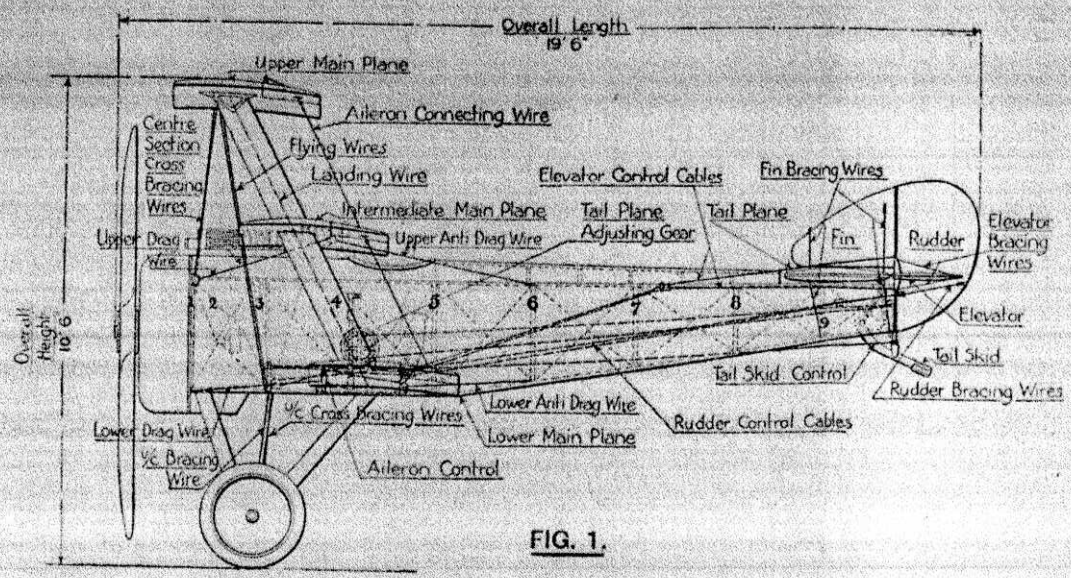

FIG. 1.

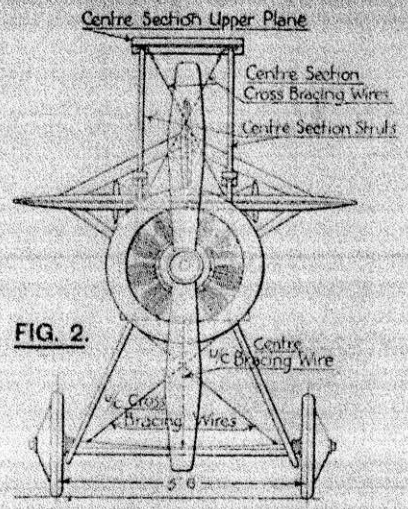

FIG. 2.

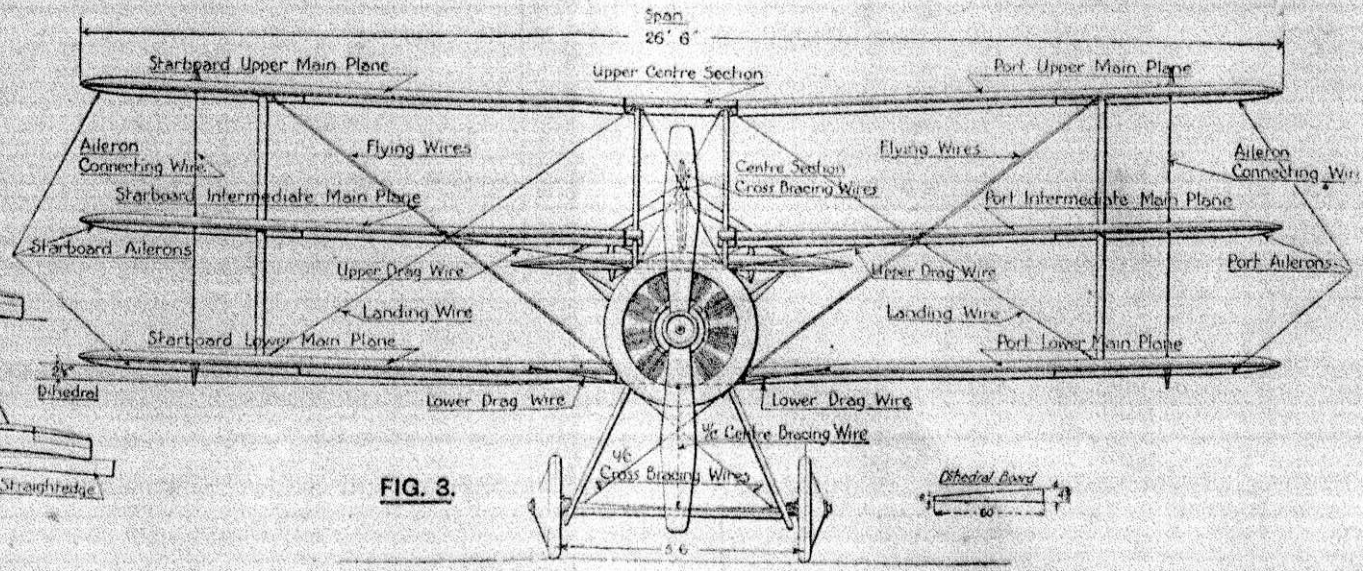

FIG. 3.

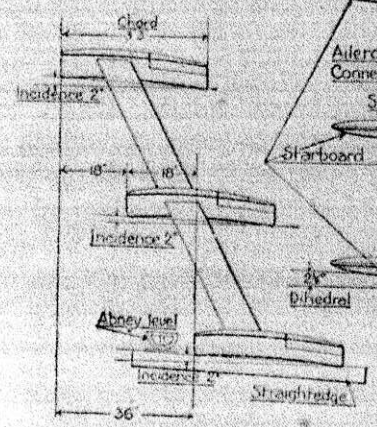

FIG. 4.

G

T.5.

SOPWITH TRIPLANE (SINGLE SEATER).

(110 H.P. AND 130 H.P. CLERGET.)

FIG. 5.

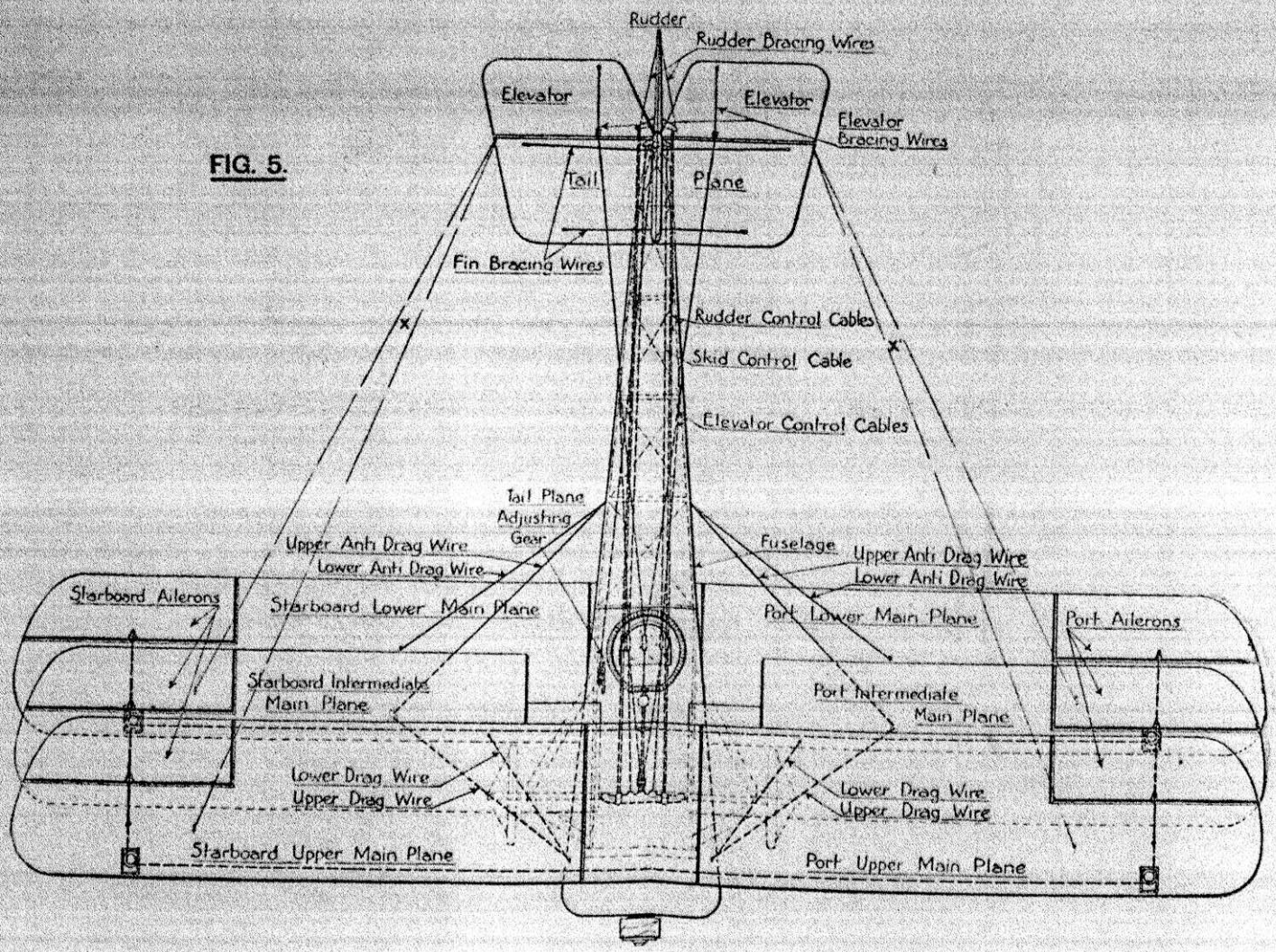

SOPWITH TRIPLANE (SINGLE-SEATER).

(110 H.P. & 130 H.P. CLERGET.)

RIGGING NOTES.